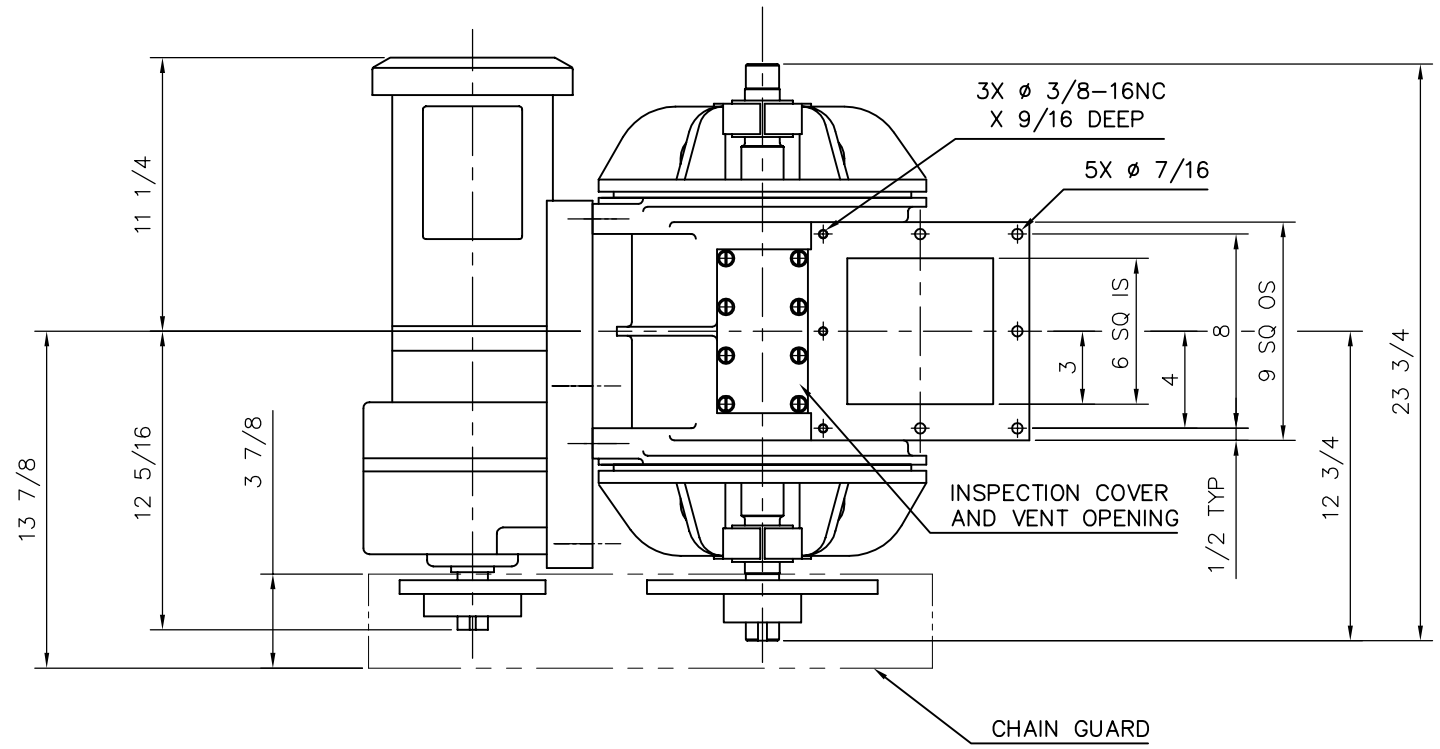

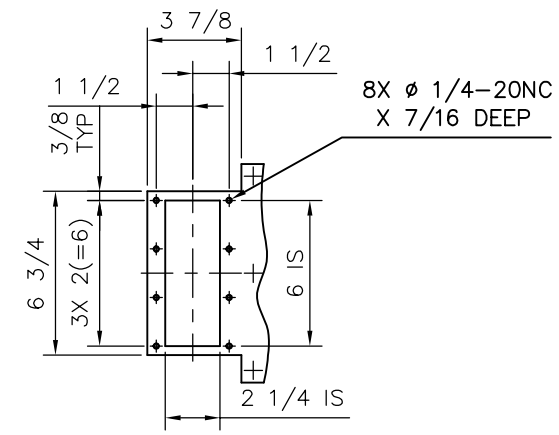

DETAIL OF INSPECTION
AND VENT OPENING

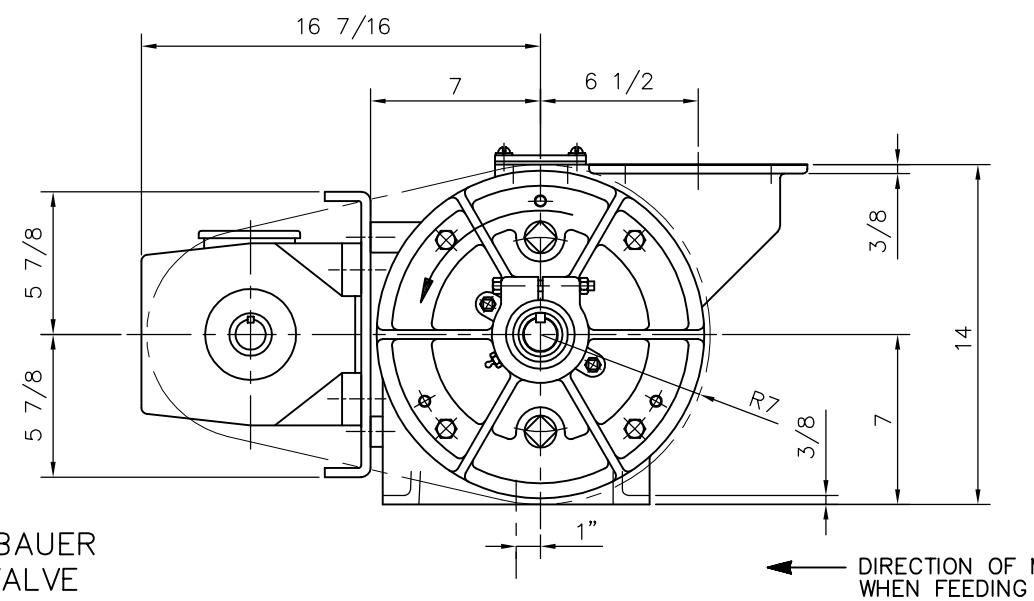

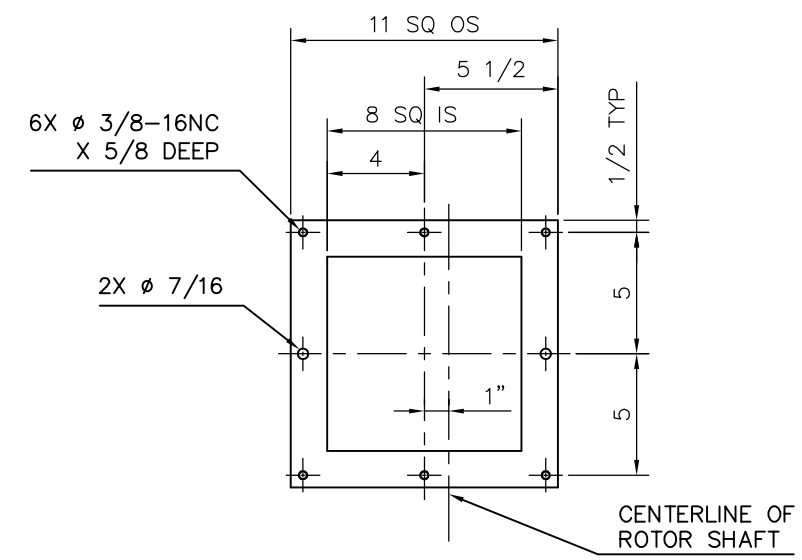

VIEW A–A

ANDRITZ SPROUT–BAUER
1008MSI ROTARY VALVE

APPROXIMATE WEIGHT
VALVE – 260 LBS.
DRIVE – 180 LBS.

A

A

DIRECTION OF MATERIAL FLOW
WHEN FEEDING AN AIR SYSTEM

Revision	A	04FEB2004	DRB	NEW RELEASE DRAWING	Revision Approved	04FEB2004	DRB
	Rev	Date	Name	Quadrant, Description		Date	Name

Order	Drawn	04FEB2004	DRB
	Checked		
	Checked	04FEB2004	DRB
	Checked	04FEB2004	RCS
	Calc		

ANDRITZ SPROUT
MUNCY, PENNSYLVANIA, USA

Reference Drawing
Replaces
Pattern
Customer Drawing
Database Reference

2V

07.1–003 TOLERANCING PRACTICES

Supplemental Documents

3RD ANGLE

ALL DIMENSIONS ARE IN INCHES

THIS DRAWING IS THE CONFIDENTIAL AND PROPRIETARY INFORMATION OF ANDRITZ INC, ANDRITZ LTD., AND/OR ANDRITZ AG ("ANDRITZ"). ANY PARTY ACCEPTING RECEIPT OF THIS DRAWING DOES SO ON THE EXPRESS UNDERSTANDING AND AGREEMENT THAT IT WILL NEITHER COPY, REPRODUCE, DISCLOSE TO THIRD PARTIES OR USE THIS DRAWING FOR ANY PURPOSE OTHER THAN THOSE EXPRESSLY AGREED TO BY ANDRITZ IN WRITING.

Order Number

Scale 1:5

Drawing Title
1008MSI ROTARY VALVE
WITH 3/4 HP DRIVE

Drawing Number
C1196–218 A
DCR/DCN

Sheet 1 of 1

CAD Drawing – Do Not Revise Manually

CAD Filename c1196–218_01.dwg

Material/Material #

Weight: Lbs.

Product Code V11

Group Number

DISTRIBUTION