ANDRITZ SPROUT 26LM II PELLET MILL
WITH 18 X 56 SINGLE DRIVE CONDITIONER
(OTHER CONDITIONERS AVAILABLE)

LEFT HAND DRIVE AND DOOR SHOWN.
ALSO AVAILABLE IN RIGHT HAND DRIVE
AND/OR RIGHT HAND DOOR.

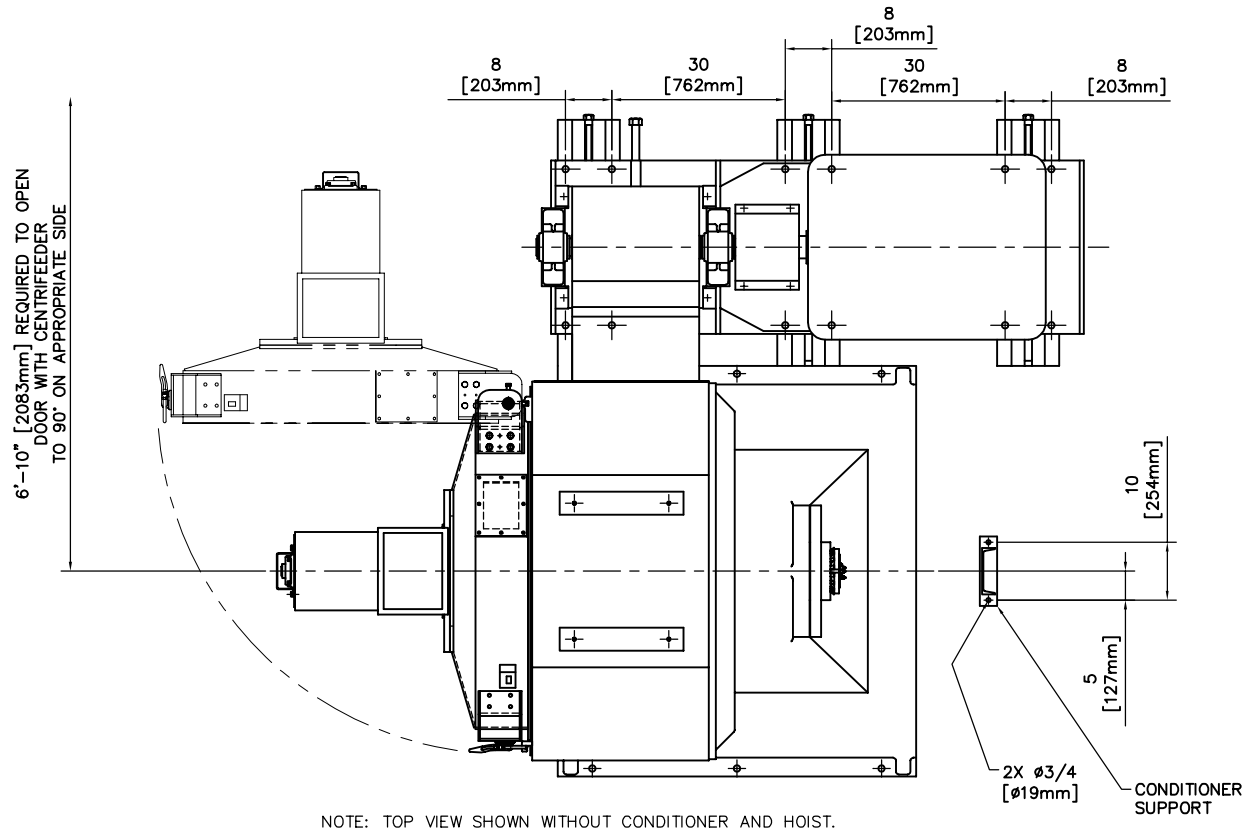

NOTE: TOP VIEW SHOWN WITHOUT CONDITIONER AND HOIST.

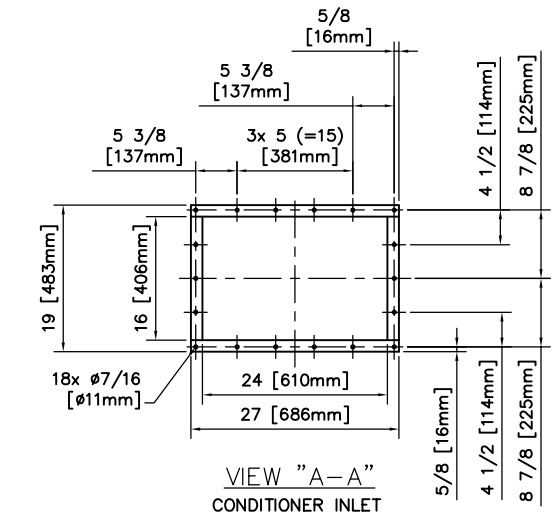

VIEW "A-A"
CONDITIONER INLET

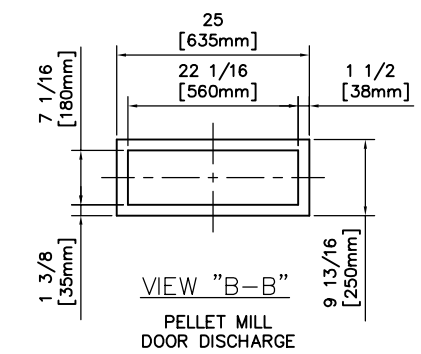

VIEW "B-B"
PELLET MILL
DOOR DISCHARGE

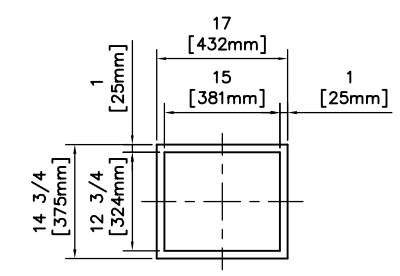

VIEW "C-C"
CENTRIFEEDER
DUMPCHUTE
DISCHARGE

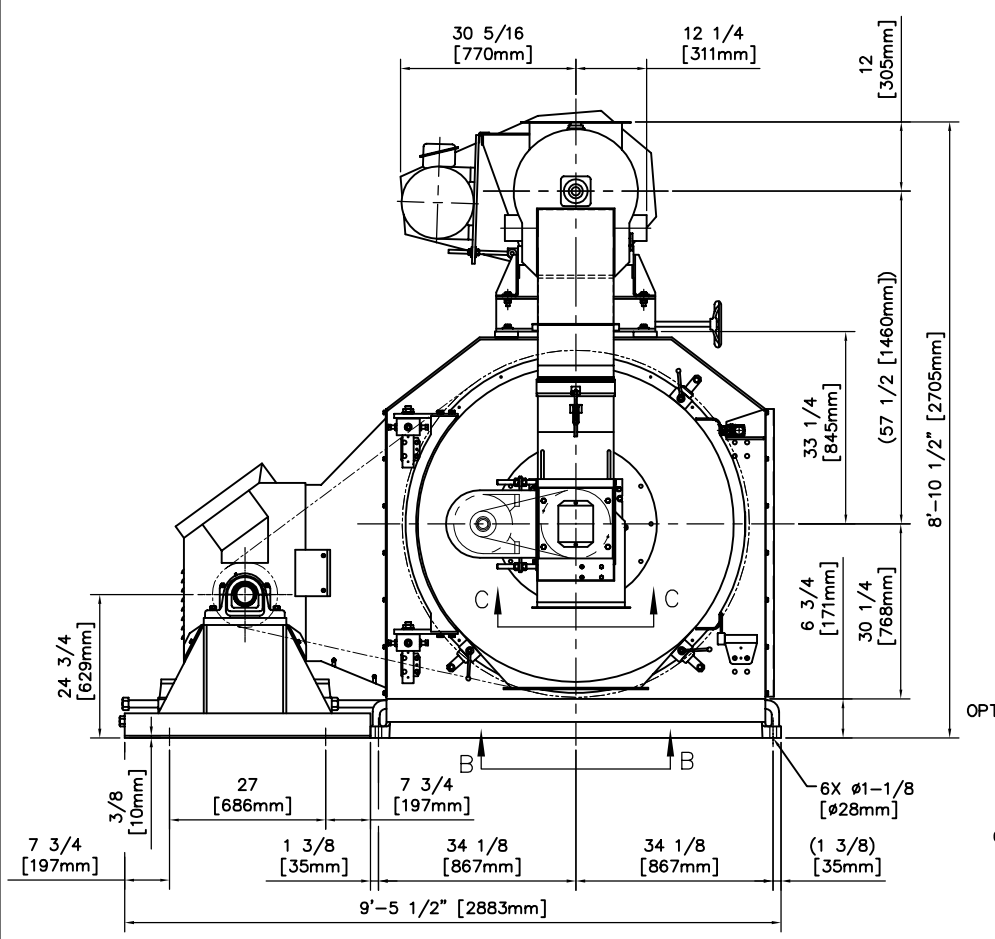

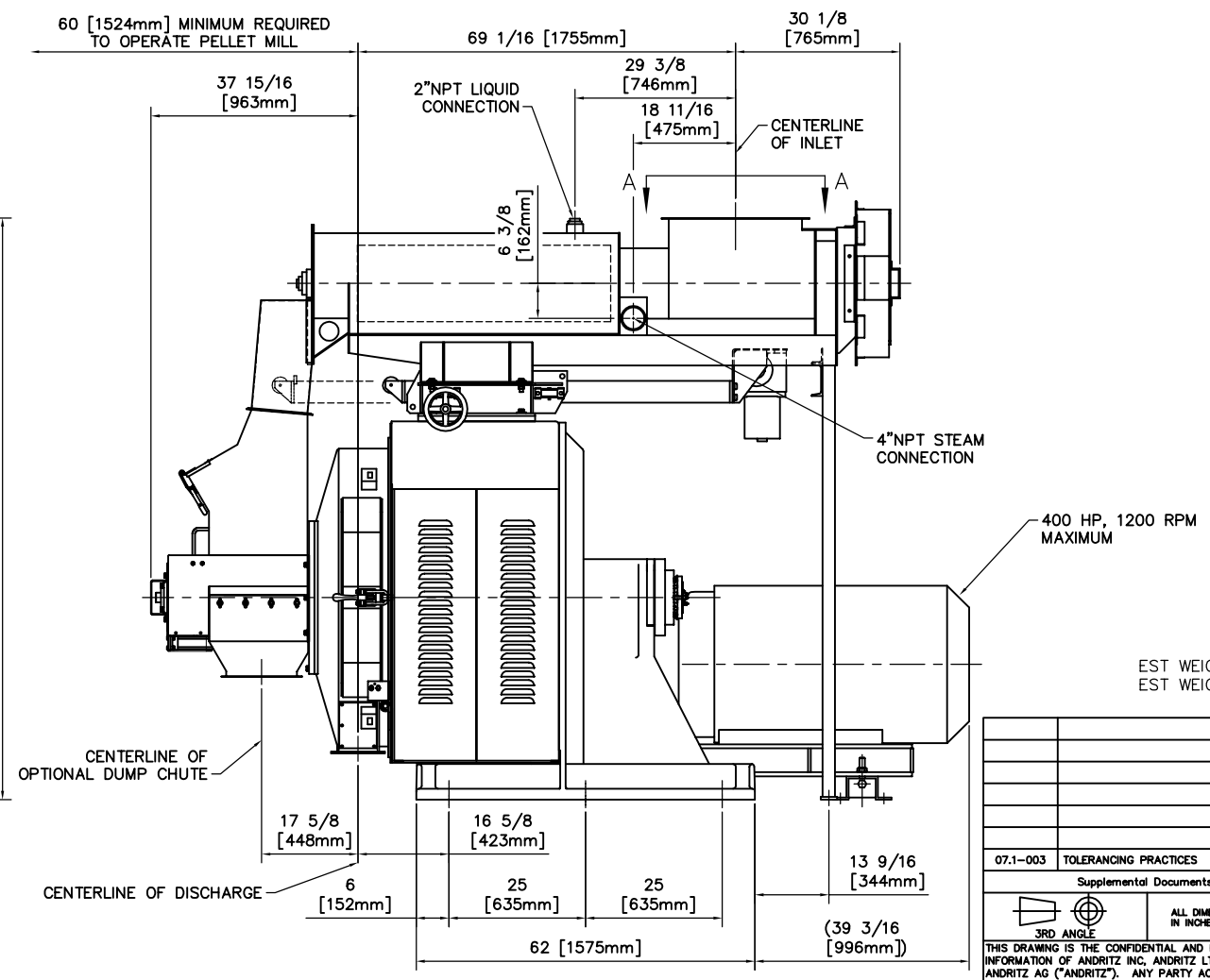

EST WEIGHT: 15,500 lbs [7,045.5 kg] PELLET MILL, CONDITIONER, HOIST, AND CENTRI-FEEDER
EST WEIGHT: 8,575 lbs [3897.75 kg] MOTOR, MOTOR BASE, DRIVE, AND GUARDS.

07.1-003	TOLERANCING PRACTICES
Supplemental Documents	

3RD ANGLE — ALL DIMENSIONS ARE IN INCHES

THIS DRAWING IS THE CONFIDENTIAL AND PROPRIETARY INFORMATION OF ANDRITZ INC, ANDRITZ LTD., AND/OR ANDRITZ AG ("ANDRITZ"). ANY PARTY ACCEPTING RECEIPT OF THIS DRAWING DOES SO ON THE EXPRESS UNDERSTANDING AND AGREEMENT THAT IT WILL NEITHER COPY, REPRODUCE, DISCLOSE TO THIRD PARTIES OR USE THIS DRAWING FOR ANY PURPOSE OTHER THAN THOSE EXPRESSLY AGREED TO BY ANDRITZ IN WRITING.

Revision

Rev	Date	Name	Quadrant, Description	Technical Approval Date	Name
Drawn	12JAN2007	DMS			
Checked	12JAN2007	TED			
Checked	12JAN2007	RCS			
Checked					
Calc					

ANDRITZ SPROUT — MUNCY, PENNSYLVANIA, USA

Reference Drawing 1FT500675
Replaces
Pattern
Customer Drawing
Database Reference

Order Number

Scale	Drawing Title	Drawing Number	Sheet
1:16	INSTALLATION, MODEL 26LM II PELLET MILL WITH 18 X 56 SINGLE DRIVE CONDITIONER	1FT500680 .DCR/DCN	1 of 1

CAD Drawing – Do Not Revise Manually
CAD Filename
Material/Material # — Weight: Lbs. SEE ABOVE — Product Code — Group Number — Lang EN

2E

DISTRIBUTION